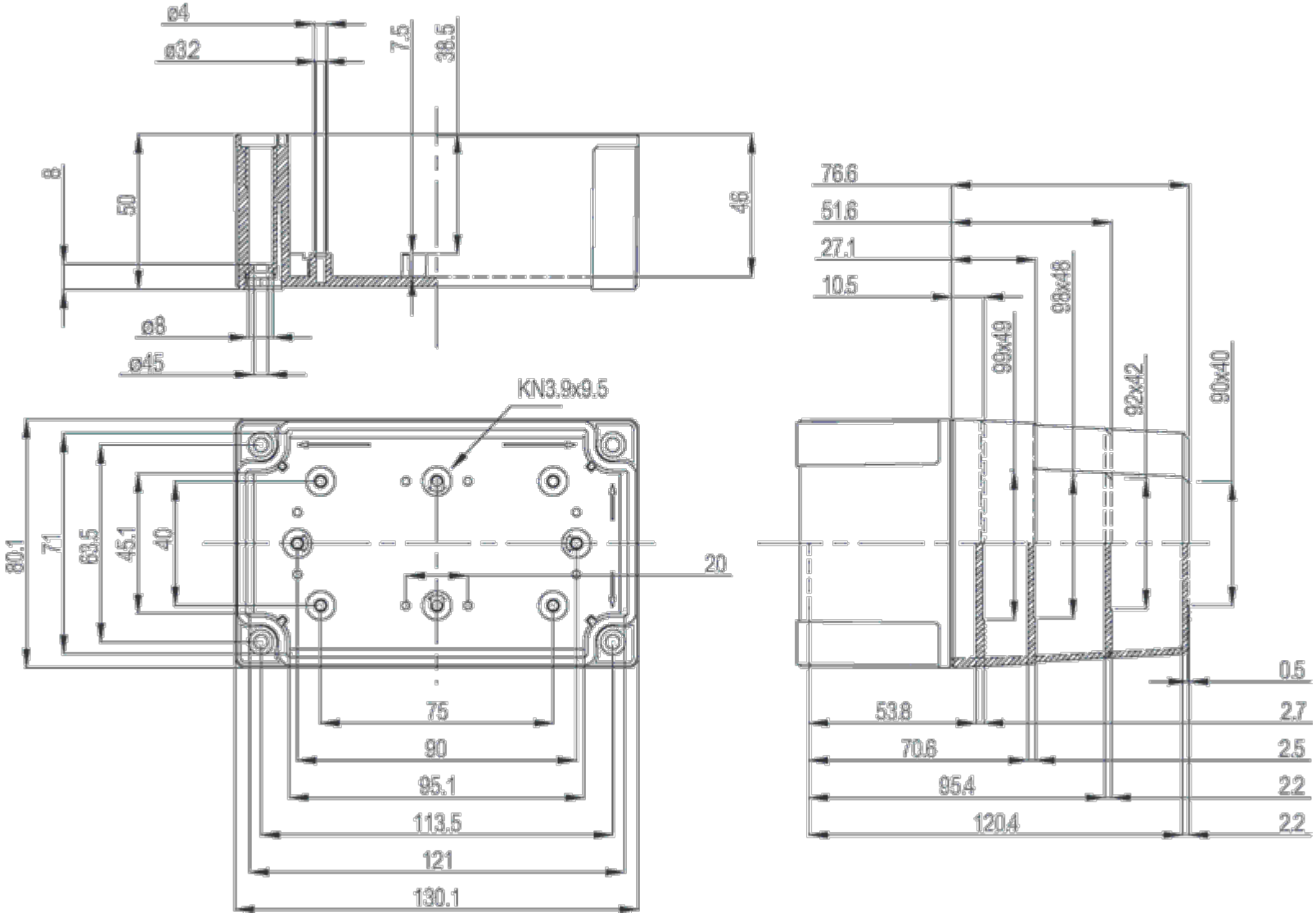
ø4
ø32
7.5
38.5
8
50
46
ø8
ø45
KN3.9x9.5
80.1
71
63.5
45.1
40
20
75
90
95.1
113.5
121
130.1
76.6
51.6
27.1
10.5
98x48
99x49
92x42
90x40
0.5
53.8
2.7
70.6
2.5
95.4
2.2
120.4
2.2